MODEL AL-50-CV/A CONSTANT VOLTAGE MODE POWER AMPLIFIER

The model **AL-50-CV/A** power amplifier is a solid state, wideband, full complimentary class AB linear amplifier. The output impedance is ideally zero because of the negative feedback. Our customers use the amplifiers for plasma excitation, induction heating, magnetic field generation and testing products such as Helmholtz coils, piezo elements, inductors, capacitors and so on. Our power ratings are for continuous duty at full power with +0.7 to -0.7 power factor.

Specifications of Model AL-50-CV/A Power Amplifiers

Output:

Output Power:	50 watts
Output Volts:	0-130 V rms. adjustable (defaulted), 0-65 V rms. and 0-260 V rms. jumper selectable
Frequency Response:	45 Hz to 20K Hz
Maximum Output Current:	0.4 A rms. @ 130 V rms.
Output Distortion:	1% T.H.D.
Hum and Noise:	-60dB below full output
Output Volt Meter:	2% front panel analog Meter
Short Circuit Protection:	Input line circuit breaker; Output fuse
Thermal Protection:	Auto-reset thermostat prevents heat damage
Power Factor Range:	+0.7 to -0.7 for full power; to zero @ reduced power

Input Signal:

Input Signal Req.:	0-1 V rms.
Input Impedance:	5K ohm
Input Waveform:	Sine Wave (Square and triangle waveforms will work at less bandwidth.)

Input Power:

Power Efficiency:	45%
Input Power Req.:	120 V AC 60 Hz (Defaulted); or 230 V AC, 50 Hz (Specified)
Input Line Ampere Req.:	2.5 A @ 120 V AC; 1.25 A @ 230 V AC

Other Specifications:

Dimensions:	3.5”H X 19”W X 14”D
Weight:	35 lbs
Cooling Method:	Internal fan (Intake-rear; Output–sides)
Operating Temp Range:	-20 to 140 deg F
Storage Temp Range:	-40 to 170 deg F

.

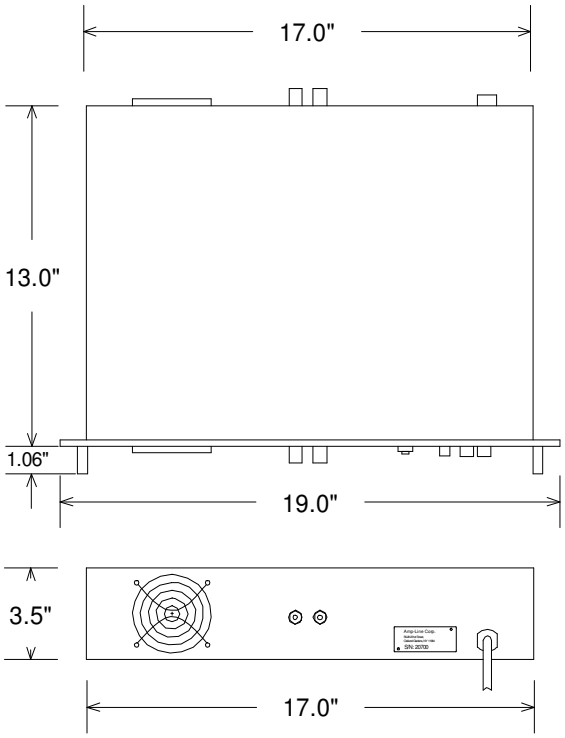

Amp-Line Corp.
3 Amethyst Court
West Nyack, NY 10994
Tel: (845)-623-3288 Fax: (845)-623-3369
E-mail: sales@amp-line.com
Web site: www.amp-line.com